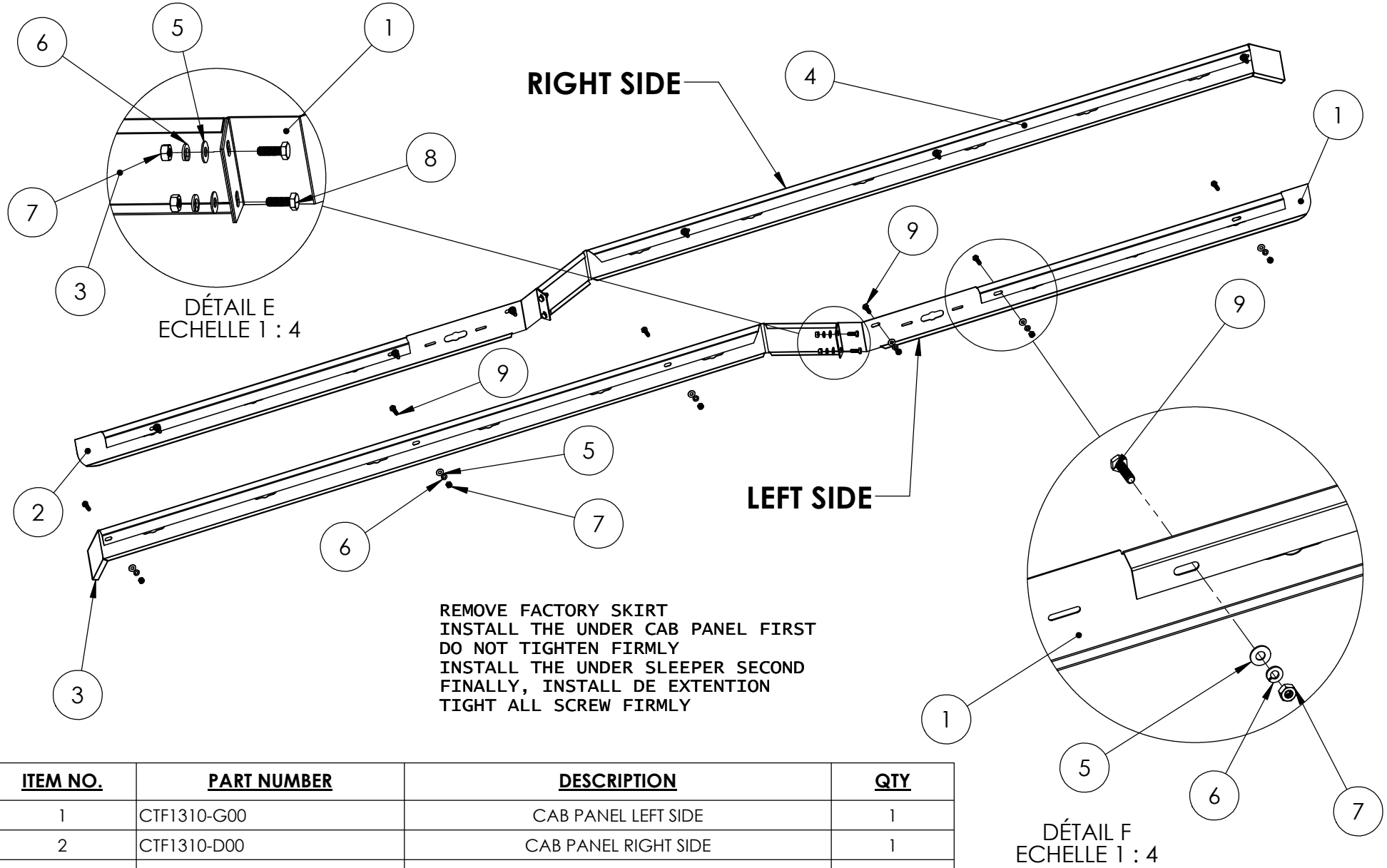

ITEM NO.	PART NUMBER	DESCRIPTION	QTY
1	CTF1310-G00	CAB PANEL LEFT SIDE	1
2	CTF1310-D00	CAB PANEL RIGHT SIDE	1
3	CTF1510-G00	SLEEPER PANEL LEFT SIDE	1
4	CTF1510-D00	SLEEPER PANEL RIGHT SIDE	1
5	B-W14SS	FLAT WASHER 1/4"	16
6	B-LW14SS	LOCK WASHER 1/4" SS	16
7	B-HN14SS	HEX NUT 1/4" 20NC SS	16
8	B-HB14X34S	HEXBOLT 1/4" 20NC 3/4" SS	4
9	B-HB14X1SS	HEX BOLT 1/4"-20NCX1"	12

TRUX ACCESSORIES

TITLE: CAB / SLEEPER KIT WITH 20 SLOTTED HOLES
FREIGHTLINER CASCADIA

Drawn: SL	Date: 2019-12-09		DWG. NO. TF-1510 - TF-1310	
Rev.:	Weight:	Size: A	Scale: 1:32	Sheet: 2 OF 2

5 4 3 2 1